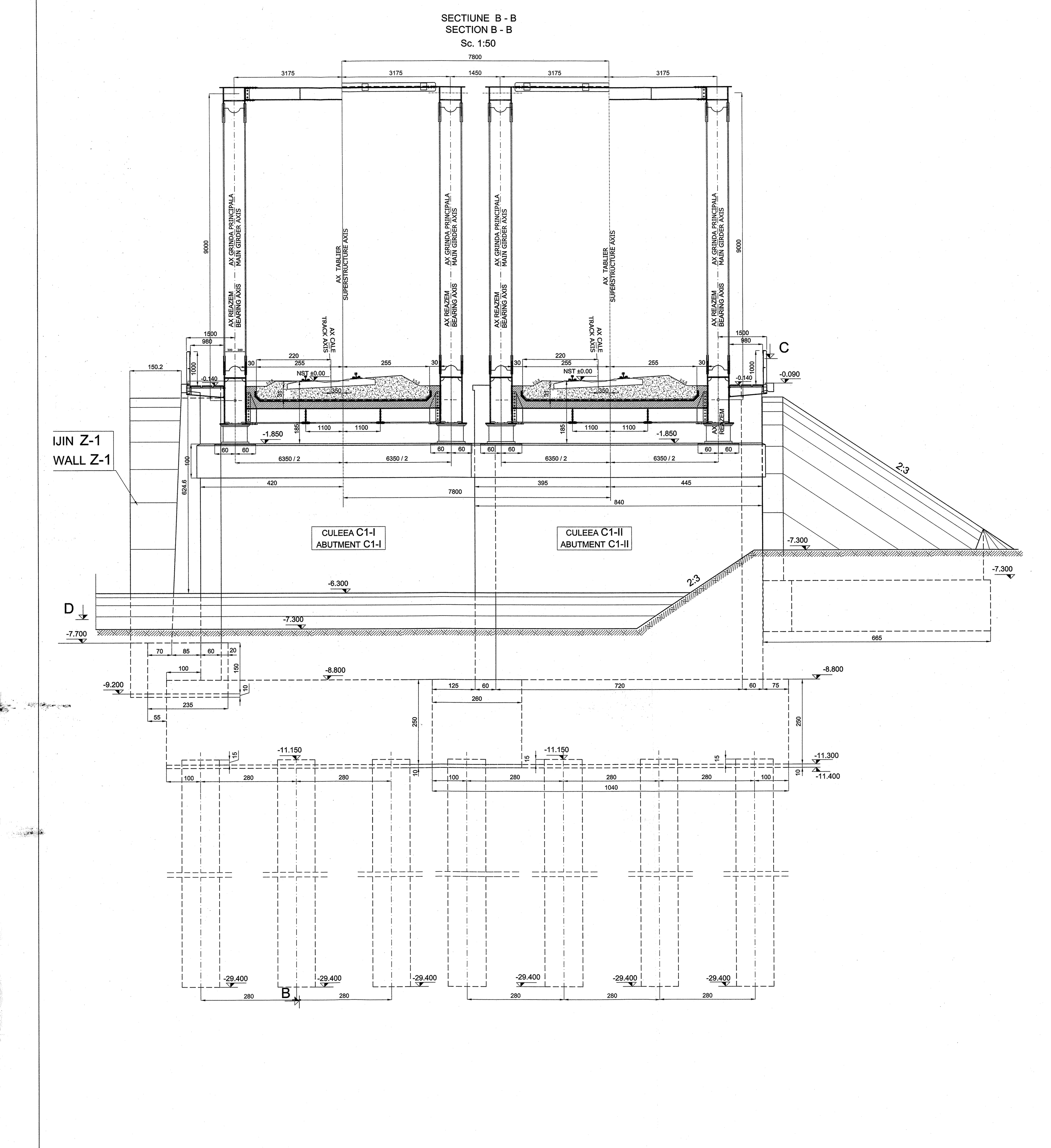

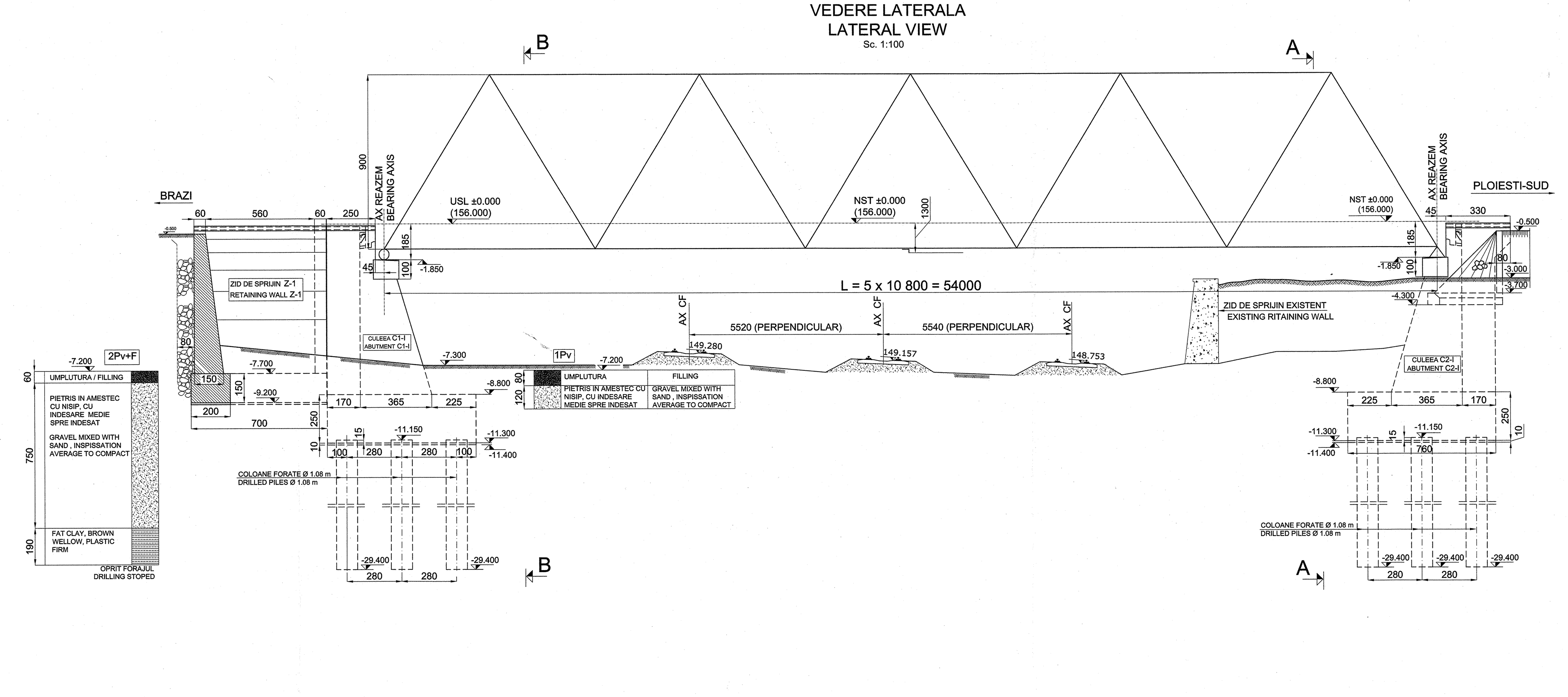

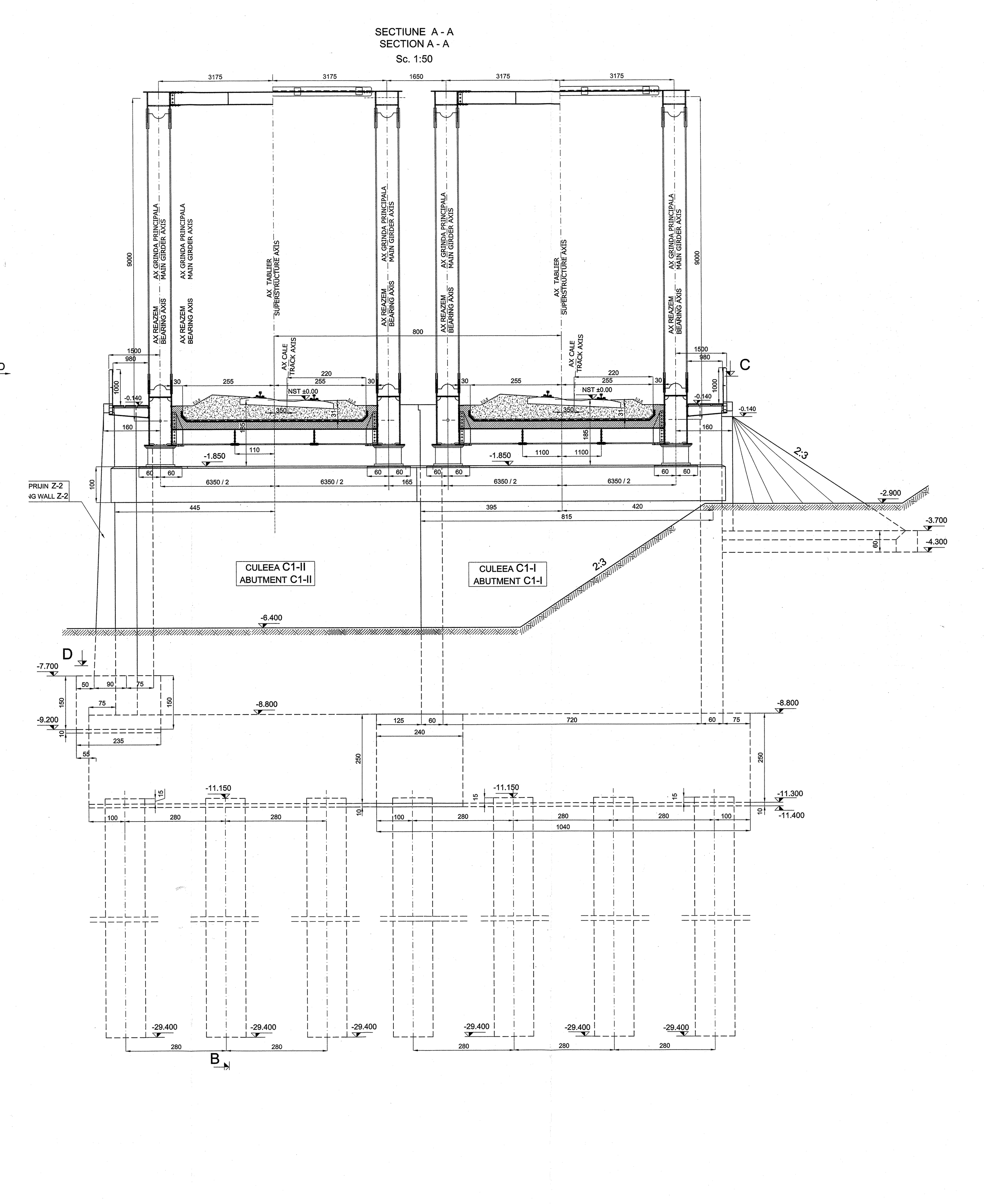

NOTA

1. PREZENTA DISPOZITIE GENERALA A FOST INTOCMITA PE BAZA URMATOARELOR DATE:
   - RIDICAREA TOPO ELABORATA DE SC VIOTOP SRL;
   - STUDIUL GEOTEHNIC INTOCMIT DE SC GEO-SERV SRL IN ANUL 2008 IN AMPLASAMENTUL PODULUI EXISTENT;
   - EXPERTIZA PODULUI EXISTENT (2008)
2. TABLIERELE NOI DE TIP GZCJ L=54.0 M CU CUVA DE BETON ARMAT IN CONLUCRARE CU GRINZILE CAII SI TALPILE INFERIOARE ALE GRINZILOR CORESPUND CONVOIULUI T8.5 SI CONVOIULUI LM-71 (EUROCODE)
3. INFRASTRUCTURA PODULUI ESTE REALIZATA DIN 2 CULEI NOI FUNDATE PE COLOANE FORATE BENOTTO CARE SE VOR INCASTRA IN STRATUL DE BAZA PE CCA 3.0 m. LUNGIMILE COLOANELOR SE VOR DEFINITIVA PE BAZA REZULTATELOR UNUI NOU STUDIU GEOTEHNIC IN CARE SE VOR REALIZA INVESTIGATII GEOTEHNICE IN AMPLASAMENTUL CULEILOR DE LA PODUL NOU. INFRASTRUCTURA CORESPUNDE CONVOIULUI P10 SI LM 71.
4. CAPACITATEA PORTANTA A COLOANELOR SE VA DETERMINA OBLIGATORIU PRIN INCERCARI STATICE "IN SITU" CONFORM STAS 2561/4-90 SI PUNCTELE 3.25 SI OBSERVATIA 1 DIN STAS 2661/3-90, PENTRU CATE O COLOANA DIN FIECARE LOCATIE PE BAZA UNUI PROIECT DE INCERCARE INTOCMIT DE PROIECTANT.
5. PODUL SE INCADREAZA IN CATEGORIA "B" DE IMPORTANTA (CONFORM HG 766/1997
6. GRADUL DE INTENSITATE SEISMICA A ZONEI ESTE ....
7. PROIECTUL VA FI VERIFICAT DE VERIFICATORI ATESTATI LA EXIGENTELE A4.2, B2.2, D2.2.

CONVOI T8.5 SI LM71 (SUPRASTRUCTURA)
P10 SI LM71 (INFRASTRUCTURA)

NOTE

1. THIS GENERAL LAYOUT WAS DRAWN BASED ON THE NEXT DATA:
   - TOPOGRAPHICAL SURVEY ELABORATED BY SC VIOTOP SRL;
   - GEOTECHNICAL STUDY ELABORATES BY SC GEO-SERV SRL IN THE YEAR 2008 IN EXISTENT BRIDGE SITE;
   - EXPERTIZA PODULUI EXISTENT (2008)
2. THE NEW SUPERSTRUCTURES ARE TROUGH TYPE TRUSS GIRDER L=54.0 M WITH REINFORCED CONCRET SLAB (IN CONLUCRATION WITH TRACK BEAMS AND WITH BEAM'S INFERIOR PLATE CORESPUND CONVOIULUI T8.5 SI CONVOIULUI LM-71 (EUROCODE)
3. THE BRIDGE INFRASTRUCTURE IS MADE FROM 2 NEW ABUTMENTS WITH THEIR FOUNDATIONS ON BENOTTO PILES WHICH WILL BE DRILLED IN THE BASE LAYER ON APP. 3.0 m. THE LENGHT OF PILS WILL BE DETERMINED ACCORDING TO THE RESULTS OF A NEW GEOTECHNICAL STUDY IN WHICH WILL BE MADE GEOTECHNICAL INVESTIGATIONS IN THE NEW ABUTMENTS SITE.. THE INFRASTRUCTURE IS ACCORDING WITH CONVOY P10 AND LM 71.
4. PILES SUPPORTING CAPACITY WILL BE DETRMINED OBLIGATORY WITH STATIC LOAD TESTS ON SITE ACCORDING TO STAS 2561/4-90 AND PARAGRAPH 3.25 AND REMARK 1 FROM STAS 2661/3-90, FOR 1 PILE FROM EVERY LOCATION, BASED ON A TESTING PROJECT PERFORMED BY A DESIGNER.
5. THE BRIDGE IMPORTANCE CATEGORY IS "B" (ACCORDING TO HG 766/1997)
6. THE EARTHQUAKE INTENSITY GRADE FOR THIS AREA IS ...
7. THE PROJECT WILL BE CHECKED BY TEHNICAL VERIFIER CERTIFIED AT EXIGENCIES A4.2, B2.2, D2.2.
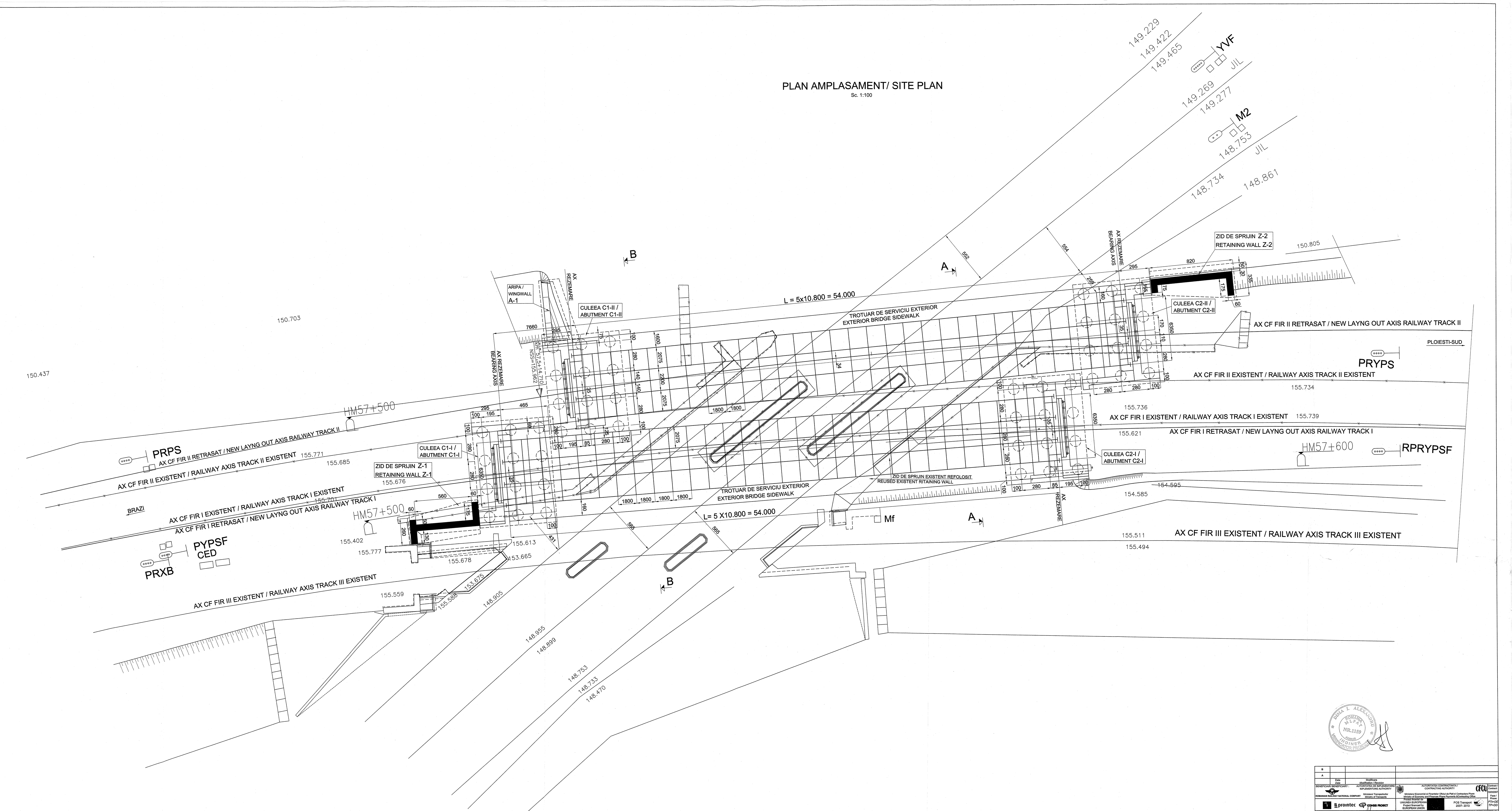
CONVOY T8.5 AND LM71 (SUPERTRUCTURE)
P10 AND LM71 (INFRASTRUCTURE)